# QUOTATION

INTERNATIONAL Syalons

**From:** **International Syalons (Newcastle) Ltd.**
Stephenson Street
Willington Quay
Wallsend
Tyne and Wear
NE28 6TT
UNITED KINGDOM

VAT No. GB 621 440 972
EORI No. GB 621 440 972 000
Company Reg No. 02943970

T: (+44) 0191 295 1010
E: enquiries@syalons.com
www.syalons.com

**Customer:** Nanoker
**Contact Name:** Violeta Torrecillas
**Contact Email:** v.torrecillas@nanoker.com
**Contact Tel:** (+34) 985 76 11 41
**Address:** Polígono de Olloniego
Parcela 22A, Nave 5
33660, Oviedo
Asturias (Spain)

**Quotation Date:** 04/03/2026
**Validity:** 5 weeks
**Payment Terms:** 30 days net of invoice
**Delivery Terms:** Ex Works (Newcastle)
**Currency:** Euro
**Expected Delivery:** 5 Weeks

Thank you for your enquiry, we are pleased to make the following offer:

| Quote No. | Description | Drawing No. | Grade | Qty. | Unit Price |
|---|---|---|---|---|---|
| 2610/33138 | TC Holder | 5115983 | Syalon 101 | 1-10 | €102.00 |
| | | | | 11+ | €96.00 |
| | | | | | |
| | | | | | |
| | | | | | |

**Notes:** Refer to attached drawing for dimensions and tolerances.

Regards,

Mick Bell
Operations Director

| Rev. | Revision note | Rev. by | Appr. date |
|---|---|---|---|
| 00 | - | | |

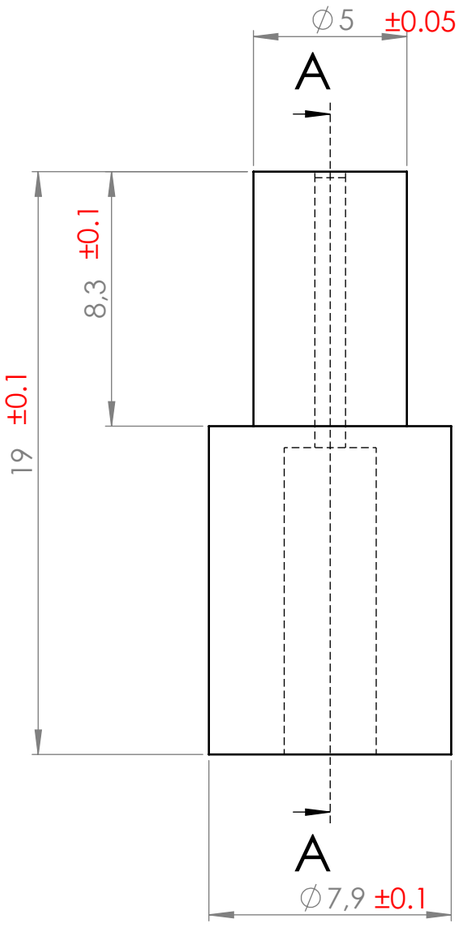


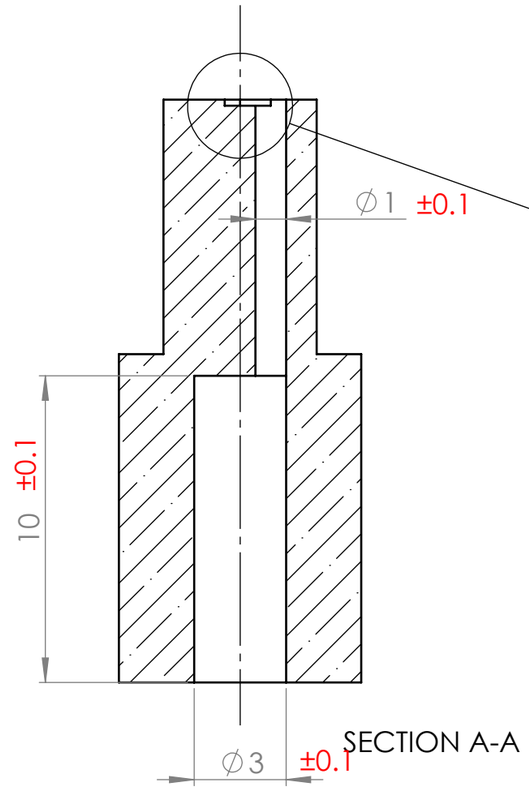


SECTION A-A

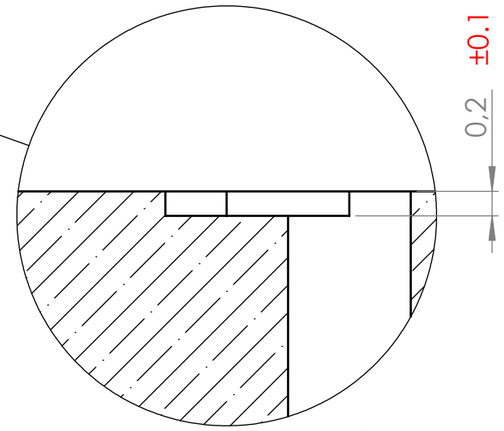


DETAIL B
SCALE 20 : 1

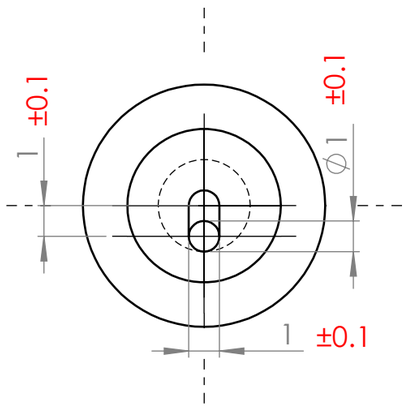


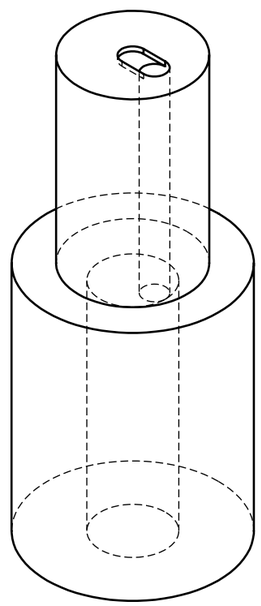

| General tolerance for machining | General tolerance for welding | General surface roughness | | Sharp edges broken |
|---|---|---|---|---|
| SS-ISO 2768 - fK | SS-ISO 13920 - | √Ra 1,6 | | 0,2 |

| Item No | Designer | Approved | Date | Status |
|---|---|---|---|---|
| 5115983 | PHN | PHN | 2025-04-14 | Released |

| Description | Scale | Size |
|---|---|---|
| TC holder | 5:1 | A3 |
| Detailed description | Rev No: 00 | Sheet No: 1/1 |

Material
Ceramic Porcelain

Surface treatment 1 / Surface treatment 2
/